American Journal of Environmental Engineering and Science
2014; 1(4):73-79
Published online September 30, 2014 (http://www.openscienceonline.com/journal/ajees)

Arch footbridge over an inner ring-road for a developing urban area

Janusz Hołowaty

Department of Civil Engineering and Architecture, West Pomeranian University of Technology, Szczecin, Poland

Email address

Janusz.Holowaty@zut.edu.pl

To cite this article

Janusz Hołowaty. Arch Footbridge over an Inner Ring-Road for a Developing Urban Area. *American Journal of Environmental Engineering and Science*. Vol. 1, No. 4, 2014, pp. 73-79.

Abstract

The paper presents the construction process of an arch footbridge with a suspended composite deck over a new dual carriageway urban freeway in Szczecin, a city in north-western Poland. While there was considerable support for a conventional beam footbridge, after a preliminary study an arch structural system was chosen. The arch footbridge was not only the most attractive option but also the safest for traffic, due to its not having a pier in the median. The location of the footbridge was chosen with regard for relatively short access ramps and stairs although the maximum grade for ramps was set quite gently, making the footbridge accessible to users with mobility impairments and younger schoolchildren. The superstructure of the footbridge consists of a pair of inclined arch ribs spanning 36.05 m which support a pedestrian deck. The through deck is suspended by inclined hangers from the ribs in the main section. The end sections of the deck are supported by ribs via lateral tubes between the ribs and slab ramp cantilevers. The arch footbridge, via slab ramps, stairs and retaining walls, connects footways and cycle tracks on both sides of the urban freeway. The building of the footbridge gives inclusive mobility for pedestrians in places where uncontrolled crossings of roadways have caused fatalities and injuries. It has also reduced fears amongst the public and parents who are anxious about unsafe routes to shops and school.

Keywords

Footbridge, Structural Concepts, Aesthetic, Steel Arch, Composite Deck, Disabled Facilities, Field Testing

1. Introduction

There has been rapid growth in motor traffic over the last two decades following the political and economic changes in in Poland. The development of different modes of transportation and their complex form of interaction have led to the necessity, in many places, for their segregation, using grade-separated facilities. The need for grade-separated crossings for pedestrians and cyclists is of great importance in urban areas in places where a high concentration of different modes of transportation are present [1], [2]. Various grade separation alternatives are used. For passing pedestrians and cyclists over urban arterials or high-volume roads, footbridges are usually used as the simplest form of segregation from motor vehicles. Footbridges change the elevation of the crossing and must be provided with ramps or elevators so they can be accessible for all users.

The paper presents the planning, design concepts, final design and construction of a footbridge over the newly -constructed third stage of the future inner ring road in Szczecin, Poland. The footbridge is localized over a divided urban arterial in an area where three pedestrian crossings were liquidated following the street modernization [1]. The newly-constructed overpass is a key element in connecting two housing estates which are split up by the inner ring road, increasing pedestrian safety and comfort on routes to shops, school, church etc. Initially, construction of the grade-separated crossing had been postponed for the later stages of the inner-road construction but several accidents between pedestrians and motorized vehicles occurred after completion of one roadway. In addition, public opinion accelerated pressure for a design incorporating a footbridge in the third stage of the future inner ring road.

The development of the arch footbridge design and construction is presented in the paper. The planning stage, design criteria, overpass construction and field proof testing are discussed. These include the selection of the footbridge and approach forms, simple static structural analysis used in the design and their verifications by 3-D model and load proof testing.

2. Planning

2.1. Inner Ring Road

The design concept for an inner ring road in Szczecin city center was established in 1996. The total length of the inner ring road will be 9.2 km and will contain several major intersections and five interchanges. The road starts in the northern part of the city, goes along the west railway ring of the city and ends in the south-east. The planned inner ring road runs mainly through uncultivated land which has been reserved for the purpose of the arterial, and the demolition of only a few buildings will be required. The connection with the eastern part of Szczecin assumes the construction of a new Oder river crossing. At the preliminary design stage, the inner ring road was divided into four sections but for construction purposes, smaller stages were established due to limited financing. For each stage assigned for completion, a separate final design was developed. In 2008, the first two stages in the north of the city have been completed (2.6 km) and the next two in 2010.

The first two completed stages of the inner ring road are in the northern part of Szczecin, and are the 2nd and 3rd stages of the project. During these stages the existing street was rebuilt and an elongation to the road constructed. A new north roadway was added and the existing carriageway (south) was refurbished. Both sides of the arterial street were provided with footways and cycle tracks. Because the arterial lies between two housing estates, acoustic barriers were installed at critical points along the roadways.

In the preliminary design for the first part of the third stage (the reconstruction of the street) a grade-separated crossing for pedestrians was planned because three unsignalled pedestrian crossings had been removed and only one signaled crossing added. While drawing up the final design, the decision was made to postpone the construction of the grade crossing for a later stage. A grade-separated crossing was deemed rather expensive and growth in traffic was not expected to be high because the next stages of the inner ring road were only at the preliminary design stage. However, this assumption quickly proved erroneous, with negative public opinion on the delay in constructing a crossing structure proving correct. After opening the new north roadway of the arterial street there was an unexpected growth in volume and higher-speed traffic on this new roadway, which was used as a two-lane street while the old roadway was under reconstruction. The decision to postpone the crossing structure was reversed and it was decided that an overpass would be built as a separate facility at the end of the reconstruction. A footbridge was selected and the author of this paper was responsible for preparing both the concepts and the final design.

2.2. Footbridge Concepts

Several locations for a new footbridge over the divided arterial were analyzed and two different structural systems for the overpass used, according to the design specifications. There was rather a long gap in the arterial street without pedestrian crossings because all existing one-level crossings for pedestrians had been removed for traffic safety, with the result that there was a large area of terrain and side streets which generate pedestrian traffic to be analyzed. The location had to take into account a safe route to school, existing bus stops and enable people with mobility impairments to use the overpass. The street runs in an east-west direction and the terrain slope runs south so the north estate is on a much higher level than the south estate. After construction of the new north roadway, there is a higher slope on the north boundary of right-of-way. The minimum clearance height for this technical class of road is 4.7 m, according to the Polish code of practice, with the maximum grade for pedestrian ramps without landings 6%.

For the initial design, two locations were chosen. One was at the lowest point of a vertical curve in the approximate center of the crossing-free section of the road, and the second was further to the east on an uphill slope. To connect the main footbridge with existing footways and cycle tracks, on both side of the road, a range of positions for the approaching ramps and stairs was considered, taking into account the location of bus stops, a school and a church. The bus stops are in the west, on both sides of the road, and the church is in the east, on the south side of the road. The church and school are in the south estate. The first location was closer to the bus stops and to the new signaled crossing but the ramps were a little too long because they were on a small downhill slope. The second location was closer to the church and parking areas on both sides of the road, with the ramps much shorter because they were on an uphill slope. Initially, the second location seemed unrealistic because the south ramp went through a group of old trees. In all locations, the proposed structure provided access not only for pedestrians but also for cyclists.

Different structural systems for the main footbridge were proposed: low- and high-raised arches, and beam and slab superstructures. Visualizations of the proposed structural forms for the footbridge were prepared and costs were estimated for the purpose of assessment by the relevant departments at the city hall, the police and the highways authority. The design concepts were also made open to the public. The cost of an arch footbridge was estimated to be approximately 20% higher than a typical beam structure, but it was considered to be safer for traffic because it had no supports in the median. There was considerable pressure for a conventional beam footbridge from the highways authority but in a vote the arch footbridge won 4:3. The arch footbridge architecture and traffic safety prevailed.

Fortunately, while assessing the preliminarily designs, no

precise decision on the location of the footbridge was made, and only an arch form for the main structure was chosen for the overpass. In the meantime, an environmental health assessment of the existing trees and plants along the arterial was carried out. A group of old poplar trees on the south side of the road proved to be in a dangerous condition and had to be removed due to traffic safety concerns. This resulted in extra terrain for a south ramp for the footbridge and no additional trees had to be felled on account of the footbridge.

3. Arch Footbridge

Once the arch form of the overpass was chosen, the main activity was to correct the height of the arch and to select the location. This coincided with the completion of the road renovation, along with new footways and cycle tracks on both sides of the road. The erection of acoustic barriers was delayed while the footbridge location was being decided. Setting out the arch profile was not straightforward. Votes at the preliminary design stage were for a high-raised arch, but the municipal architect suggested that the height of the arch should be lowered a little. At the preliminary design, an arch was chosen with a small vertical radius at the crown, but for the final design the radius was enlarged to result in a lower arch height (Fig.1). The flatter structure generates higher spreading forces but the surrounding condition allows them to be fed directly into pile foundations with relatively short piles.

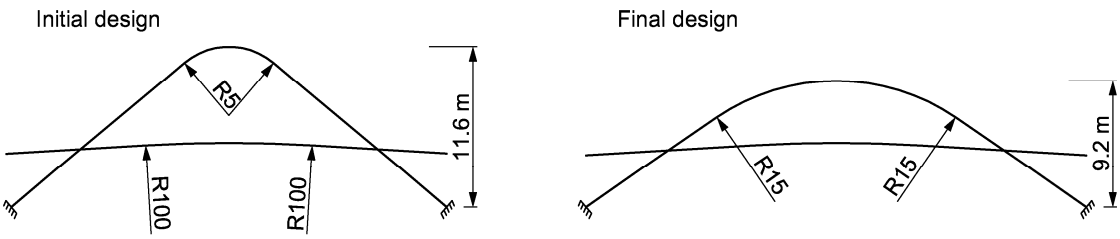

Fig 1. *Changing the arch profile*

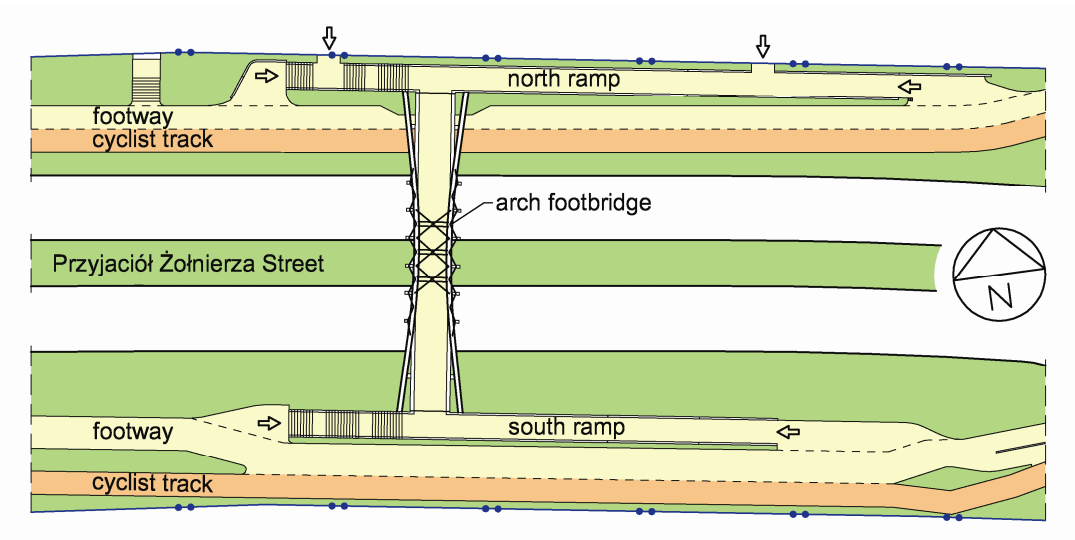

Fig 2. *Plan of the pedestrian overpass*

An incline was selected for the location of the footbridge (Fig. 2) so that the structure could work with the contours of the approach slopes. The approach ramps and stairs are placed on RC slab superstructures supported by single columns and small abutments. The end sections of the ramps are supported by tiny retaining walls. The vertical alignment of the overpass is adjusted for improved access. The widths of the main deck and ramps are set for shared use by pedestrians and cyclists. The width of the main deck walkway is 3.5 m, and 2.5 m for the ramps and stairs.

3.1. Arch Superstructure

The through arch superstructure consists of a pair of inclined arch ribs spanning 36.05 m which support a composite deck. The ribs are steel tubes with a diameter of 406.4 mm. The ribs are 3.5 m apart at the crown, 5.15 m apart where the ribs pass the deck and 6.25 m apart at the springing points (supports). The elevation of the footbridge is shown in Fig. 3 and the cross section at the midspan in Fig. 4. The proposed colors are also shown in these figures. The ribs consist of two straight tubes (legs) and a circular section at the midspan. The thickness of the tube walls differs according to the calculated bending moments. The tops of the ribs are linked for stability by diagonal and lateral tubes (upper bracing), and also braced by lateral tubes where the sections pass the deck. At the springing points the plate bases of the

ribs are fixed to plinths by bolted connections.

The deck is suspended by inclined hangers from the ribs in the main section. The hangers are inclined in two planes. The end sections of the deck are supported by the ribs via lateral tubes and cantilevers of slab ramps. Guided elastomeric bearings are used for these supports to ensure the lateral stability of the deck. The deck has a composite construction with a steel grid and reinforced concrete deck slab. The depth of the slab is 145÷170 mm. The strength class of the concrete is C32/40 and its reinforcement grade is 500 (f_{yk} = 500 N/mm^2). The deck slab is cast in place and has monolithic parapet beams. The steel grid consists of a pair of stringers 3.2 m apart and floor beams at 3 m spacing, with end spacing of 3.5 m. In the main section of the deck, there are longer floor beams for hanger connections. For the steel grid, HEB 200 hot rolled wide flange beams are used. The steel used in the design was of Polish grades which are approximately equal to European grade S235 but when checking availability, for almost all the parts the grade was changed to S355. The hangers are 30 mm diameter rods with Pfeifer system fork connectors. The steel grade of the rods is S460N (f_y = 460 N/mm^2).

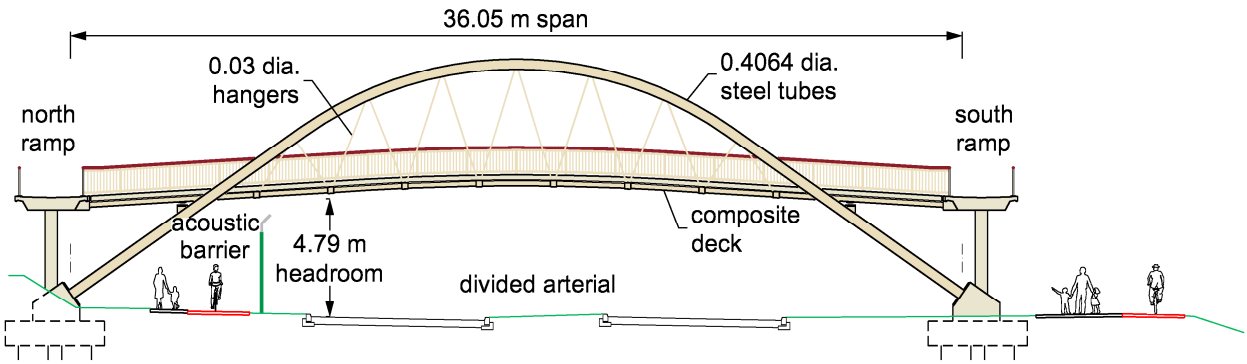

Fig 3. *Elevation of the footbridge*

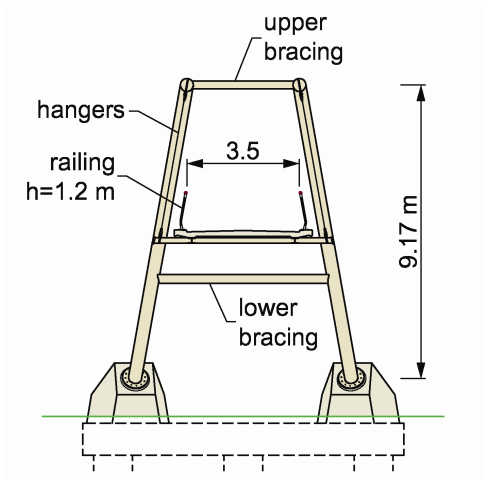

Fig 4. *Cross section of the footbridge*

The ribs are set back well and are able to withstand vehicle impact. The headroom of the deck is higher than 4.7 m but the impact of exceptionally high loads is possible. The concrete deck slab is reinforced, the slab is composite with a lower steel grid and laterally fixed deck bearings are used to stabilize the deck against horizontal forces. The ends of the floor beam cantilevers are finished with 20 mm thick plates. The concrete deck slab and bearings also make the deck resistant to swaying. The ends of the deck are anchored by vertical bars to prevent uplifting. Expansion joints are placed at the ends of the deck. The concrete walkways and parapet beams are finished with epoxy and crushed sand.

3.2. Ramps and Stairs

To keep the overpass within the right-of-way, the ramps and stairs were designed parallel to the carriageways (Fig. 2). The lengths of the ramps are nearly 40 m (south) and 53 m (north). The elevation of the south ramp is shown in Fig. 5. The main sections of the ramps have a slab form and are supported by single circular RC columns to make the structures more transparent. The stairs have no intermediate support and are made continuous with the slab ramps; expansion joints are placed only on end supports. The total length of the retaining walls is 66.5 m. The concrete class is C32/40 for the ramps and stairs and C25/30 for the supports and retaining walls, and a yield strength of 500 N/mm^2 is used for all the steel reinforcement.

3.3. Foundations

For the design of the foundations, a soil survey was conducted to establish the appropriate type of foundations. The condition of the ground is good, with the principal soil a stiff clay. However, a piled foundation was chosen for the arch bridge, slab ramps and stairs, with shallow spread foundations for the retaining walls. Piles which were bored and cast in place were used, to avoid vibrations in an urban area. Relatively short piles with a 1.2 m diameter were used but they give suitable anchorage in a stiff clay substrate. Piles were also used for the stair end supports to prevent differential settlement in continuous structures.

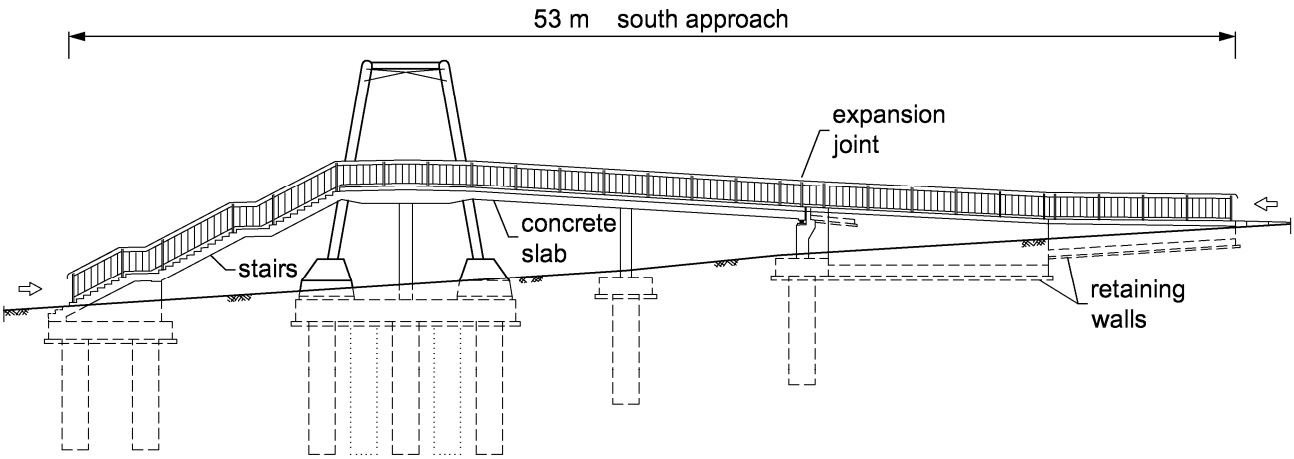

Fig 5. Elevation of the south approach

4. Design and Construction

4.1. Detailed Design

The superstructures of the arch footbridge and the ramps were analyzed using two-dimensional computer models (2-D). To verify the results for the arch footbridge, a three-dimensional computer model (3-D) was used. The 3-D model determined slightly lower values for internal forces. The deck of the arch bridge was designed using a simplified procedure according to the Polish Standard. To program load proof tests on the arch footbridge, a 2-D model was also used. After a comparison of results from these two models and the simplified design procedure, the 2-D model was judged to be safe. Although the simplified design method was used for the footbridge deck, it allowed the optimization of the height of the steel beams in the grid, and therefore sections lower than in the initial design could be developed (HEB 200). The compression arch ribs were tested for buckling mode. The use of lateral bracing between the ribs built up an adequate level of lateral stiffness. The lower straight section of the ribs and their bolted connection with the plinths were designed for bending moments and axial forces. The plate bases of the ribs are fixed to the plinths by a group of 30 mm diameter bolts to form a full moment connection. The bolts are located inside steel void former tubes rigidly connected in a steel plate anchored inside the plinth. The bridge deck and hangers have been designed to permit the controlled replacement of any one hanger without any additional support. The hangers are also kept quite far away from the walkway and hence from the influence of vandals.

Although the footbridge structure is complicated overall and also in the details, the design drawings were prepared in the conventional manner as two-dimensional. 3-D shop drawings were only prepared for the steel structure and the rib-plinth connections. Details of the connection between the hanger brackets and the ribs are shown in Fig. 6 and with the floor beams in Fig. 7. There were many detailing problems not only in the steel structure but also in the concrete elements of the deck.

Porcelain was selected as the color for all the elements of the overpass except for the handrails (Figs 3, 4). For the handrails, a ruby-red color was adopted. For the steel elements of the arch footbridge and balustrades a darker tone of porcelain was developed to make a slight contrast with the concrete elements. This results in the colors appearing similar on rainy or dark days but on sunny days the contrast is visible.

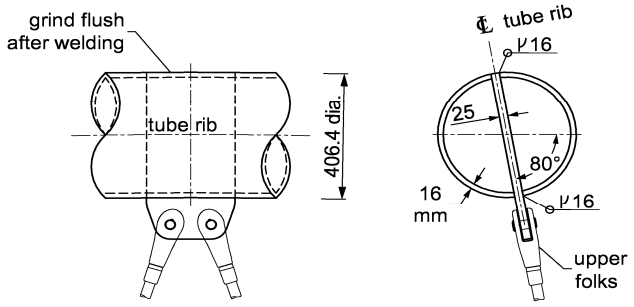

Fig 6. Hanger upper lug detail

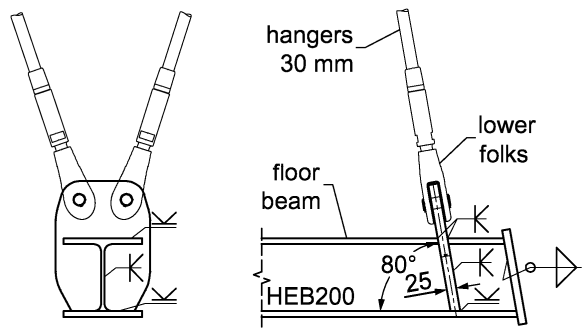

Fig 7. Hanger lower lug detail

4.2. Construction

In late summer the earthwork and pile construction started and the footbridge was essentially finished within four months, just before the winter. The existence of water, gas pipes and cables required careful avoidance during excavation. While preparing the pile foundations, the retaining walls were constructed. The pile length is 7 m for the main arch and 6 m

for the ramps and stairs. The columns are fully fixed to both the foundations and the slab ramps. The slab ramps are supported on abutments where elastomeric bearings are placed. The stairs have no intermediate supports; the stair slabs are made continuous with ramp slabs and supported on small foundation pads without bearings.

The main steel arch structure was divided in four segments and transported to the site for assembly and erection. The south roadway of the arterial was temporarily closed to traffic and the arch segments were lifted onto temporary supports and welded together. The erection of the arch structure onto the foundation plinths was planned for two hours at night to ensure only a short period of closure for the divided arterial but the procedure took a little longer. For lifting in the arch structure, one large mobile crane was used. A small crane was also used for fitting the flexible ribs of the arch structure into the fixing points. Then five segments of the steel deck were delivered for assembly. They were fabricated with precamber due to dead load. All the connections in the steel structure were welded. Shop drawings of the steel structure had been prepared in a 3-D format so it was decided that no trial assembly for all the segments would be necessary and this was therefore not conducted. After the steel arches and suspended steel grid had been erected, a formwork for the slab cast in situ was based on the steel deck beams. The reinforced concrete slab was a composite with the steel beams with 16 mm diameter studs. The steel segments and reinforced concrete slab of the bridge deck were constructed while a minimum of one roadway was open to traffic. The autumn conditions were rather mild at the time of erection and casting; however night-time temperatures fell below zero and the contractor had to protect the welding and casting works with tents.

The assembly of the railings and finishing work were completed in late autumn. Meanwhile a load proof test on the arch footbridge superstructure was conducted. The footways and cycle tracks, which had been dissembled for the footbridge construction, were reconstructed. The gradient of the southern footway and cycle track was corrected to the maximum recommended value. The finishing layer of epoxy pavement on the overpass walkways (in a dirty beige color) was delayed until warmer weather returned. The general view of the footbridge after opening is shown in Fig. 8.

Fig 8. *Arch footbridge at opening*

5. Field Testing

Field proof testing of the arch footbridge was carried out when completion was approaching. Load tests were limited to a measurement of the suspended deck behaviour under static and dynamic loads. The aims of the load test were to confirm static calculations and check vertical vibrations under pedestrians walking and vandal loads. As the suspended deck has a concrete slab which has been cast in place and is supported by eight transversally fixed bearings at the end sections, it is laterally stable and no lateral vibration was expected or measured. There were no railings on the parapets when the load tests were carried out. The surface of the deck was protected by plywood during the proof tests.

5.1. Static Loading

For the static load test, precast concrete slabs with a mass of 1.7 t each were used. The precast slabs modeled a uniformly distributed load of 3.75 kN/m^2 onto the deck. Displacement transducers and clock gauges were used to measure vertical displacements. Two transducers were placed at the bottom flanges of the steel stringer at the arch midspan. The transducers were later used for dynamic loads. Deflection measurements were carried out under increasing loads; at one stage one concrete plate was placed. The static load test was executed to achieve a typical live load at the midspan of the deck.

The measured vertical displacements were in the elastic rage and did not reach the expected values. The maximum measured displacement under the full static load on the central section of the deck was only 1.1 mm. Very low remaining displacement values were noted. The values were smaller than expected because of the arch effects in the composite deck and the influence of anchors at the ends of the deck.

5.2. Dynamic Loading

Dynamic analysis of the arch footbridge predicted that the

first four vertical modes of natural frequencies would be 0.72 to 2.59 Hz. The recommended value of accepted acceleration for pedestrians was taken from the first natural frequency as 0.42 m/s^2 < 0.07g = 0.69 m/s^2. Vibration tests were carried out using two transducers (from the static test) and two accelerometers. They were located at the midspan on both longitudinal deck stringers and were connected to data acquisition and measurement equipment located on the median.

To generate and measure the dynamic responses the test loadings were:

1. two people walking across the bridge
2. six people walking across the bridge
3. vandal loading modeled by dropping a precast slab onto the deck

The walkover tests were performed twice. For the vandal tests, a precast slab with a mass of 1.7 t was used. The slab was set up on the deck at the middle of the arch span and lifted up 0.25-0.30 m by a crane and then dropped suddenly to impart an impact force in a vertical direction. The dropped slab test took into consideration vandals deliberately trying to excite the bridge deck. The measurements were made during the day and the influence of traffic, wind and mechanical works were noted. The maximum acceleration of the deck for test 1 (2 people) was 0.05 m/s^2 and for test 2 (6 people) 0.10 m/s^2. Fig. 9 shows the vertical accelerations measured in the walkover tests.

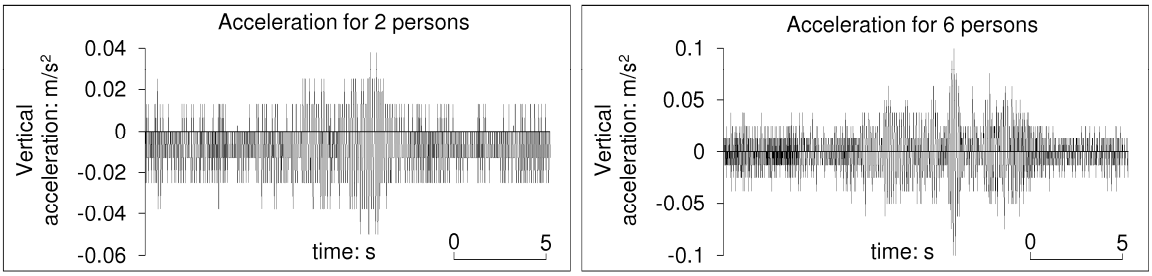

Fig 9. *Acceleration responses measured on the footbridge deck: test 1 – two people, test 2 – six people*

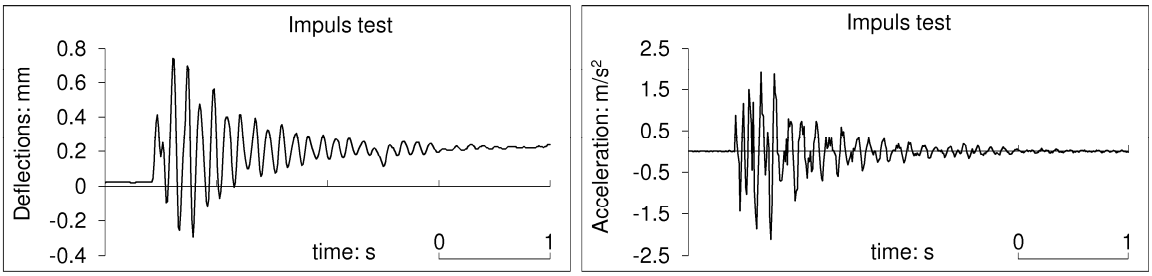

Fig 10. *Responses measured for the impulse test: deflections and vertical accelerations*

Fig. 10 shows the resulting sets for the impulse tests. The peak deflections measured were 0.75 mm and accelerations 2.0 m/s^2. In total, four impulse tests were carried out and all the response time histories measured quickly diminished. The modal frequencies of damping vibrations based on the deflections were estimated at 0.117 to 0.153 Hz. The footbridge was estimated to have good damping parameters.

6. Conclusions

The arch footbridge was completed, within the five-month timeframe and the available budget. Once erected, the bridge was statically and dynamically tested.

The response of the suspended deck was found to be very stable. The measured values of deflections and accelerations were found to be very low and within acceptable limits. It is important to note that no vertical vibration of the footbridge can be felt when walking. The load test proved that the footbridge deck is stable and strong, with no excessive deflection or vibration measured.

The architecture and structure of the arch footbridge was chosen after assessments of different schemes. Since the footbridge crosses a divided arterial with a median, an arch structure complies fairly well with the minimum span length without intermediate supports and the maximum span length within the right-of-way. Now it is an attractive landmark which has achieved wide acceptance by the public.

The design recognised the importance of providing both walkways and cycle paths on the overpass. Providing minimum widths for shared and unsegregated cycle traffic and fully accessible ramps has made the structure accessible for all users.

References

[1] Hołowaty J. "Design concepts of new bridges for pedestrians and cyclists in Szczecin", Seminar: Pedestrian bridges Wrocław, 2007: pp. 299-306 (in Polish).

[2] WELLS M., CLASH P., "Footbridges" in ICE manual of bridge engineering, Thomas Telford, London 2008: 459-484.